STANDARD FEATURES:
- CERTIFIED ASTM F2656-20 M30/P1 (DP* 3.05 LF)
  - TESTED AS A SINGLE BOLLARD CONFIGURATION
- CLEAR OPENING 48”
- HYDRAULIC POWER UNIT (HPU) AND OPERATOR CONTROLS
- LOST CASING DESIGN
- HOT DIPPED GALVANIZED STEEL

**DYNAMIC PENETRATION*

OPTIONAL:
- CUSTOM COLORS
- COLD WEATHER KITS
- POST-MOUNTED TRAFFIC SIGNAL
- BATTERY BACKUP
- VEHICLE LOOP DETECTION
- PRIMARY AND REMOTE CONTROLS
- EMERGENCY FAST OPERATION (EFO)

NOTES:
- INSTALLATION BY OTHERS
- REFER TO PROJECT-SPECIFIC SUBMITTALS FOR SPECIFICATIONS AND DETAILS
- REACH OUT TO YOUR AMERISTAR BARRIER REPRESENTATIVE FOR A FULL LIST OF OPTIONS AND PROJECT COORDINATION AT PH 866-467-2773 OR AMERISTARBARRIERS@ASSAABLOY.COM

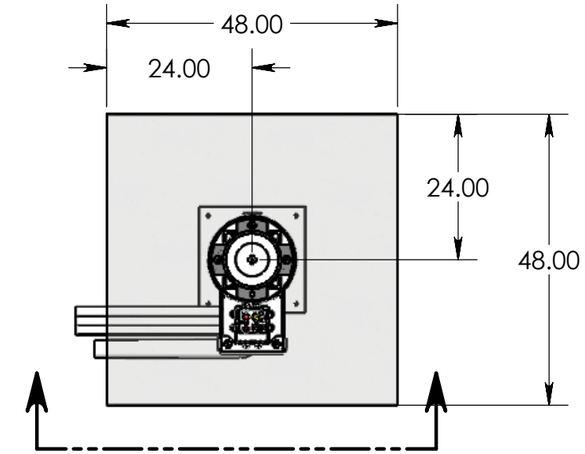

VEHICLE IMPACT DIRECTION

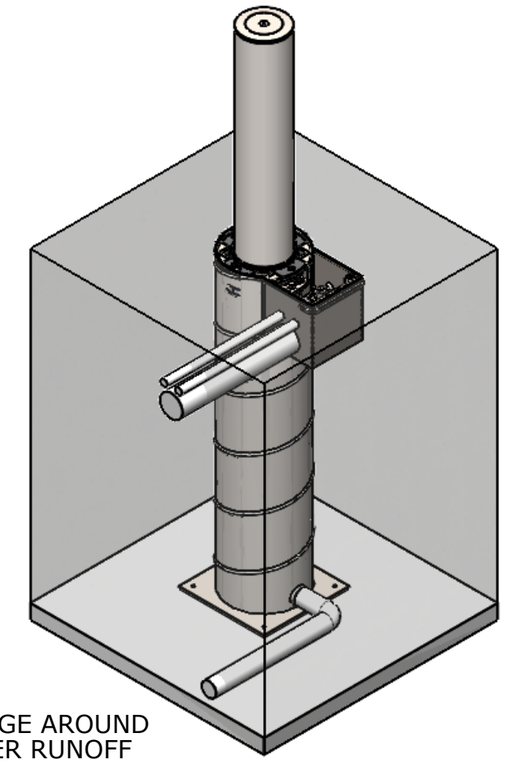

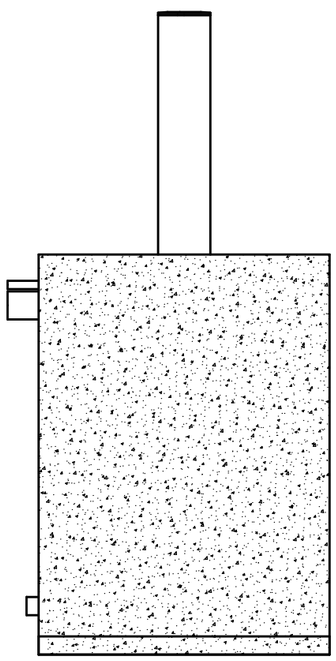

DEPLOYED

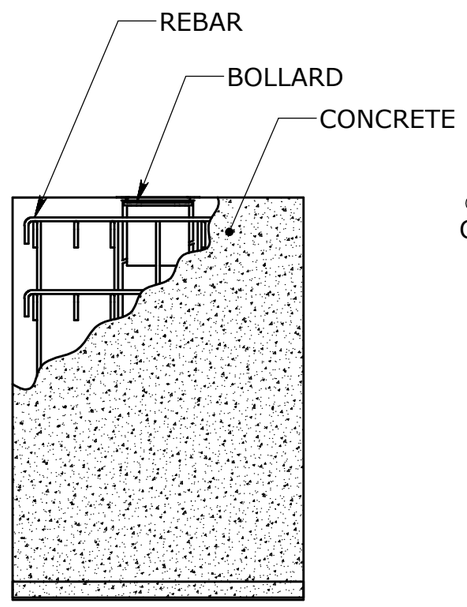

UNDEPLOYED

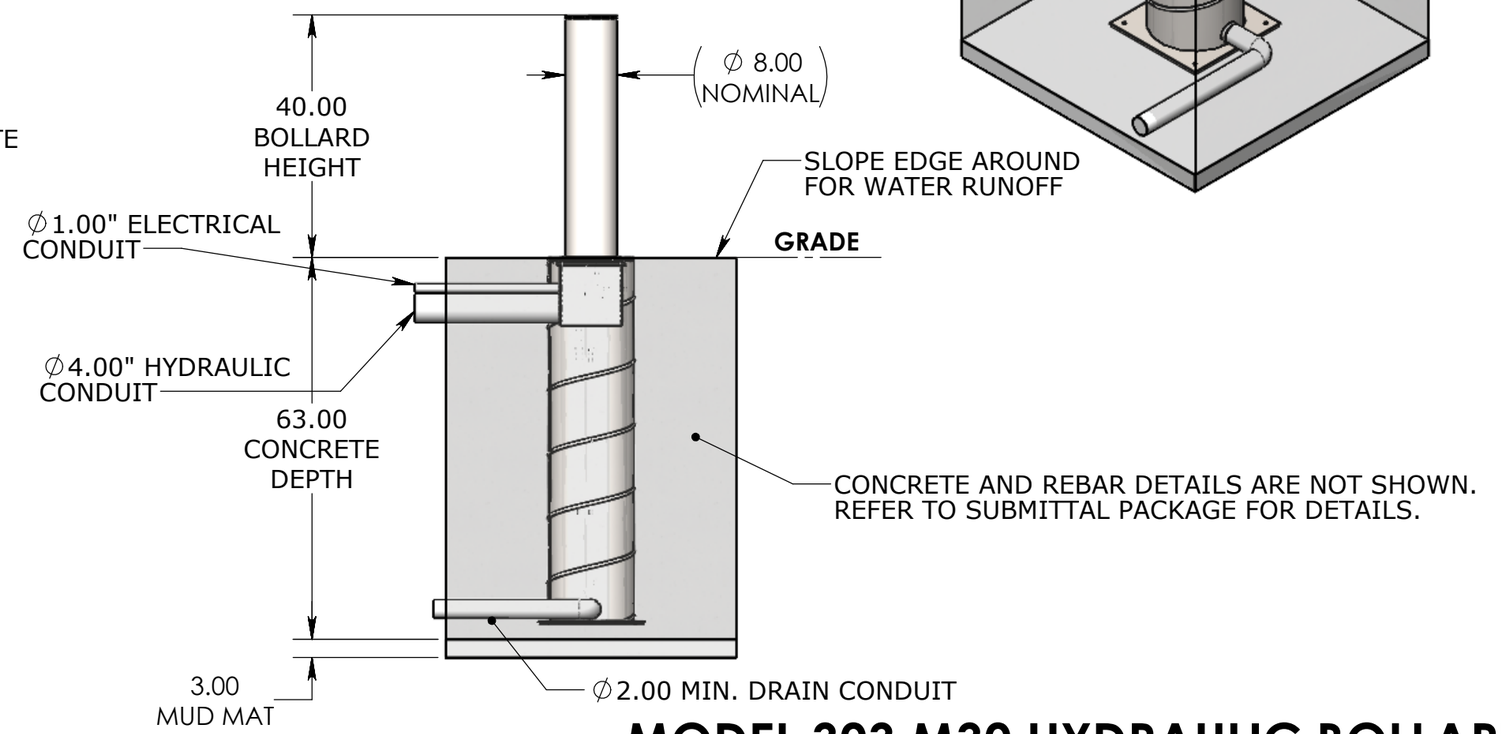

REV. B 4/2025

MODEL 303 M30 HYDRAULIC BOLLARD